Chapter 4—Student Reading

Parts of the atom

An atom is made up of *protons*, *neutrons*, and *electrons*. Look at the model of a carbon atom from the graphite in the point of a pencil. Protons and neutrons are in the center or *nucleus* of the atom. Electrons are in regions surrounding the nucleus. In the carbon atom, there are six protons, and six electrons. The vast majority of carbon atoms also have six neutrons.

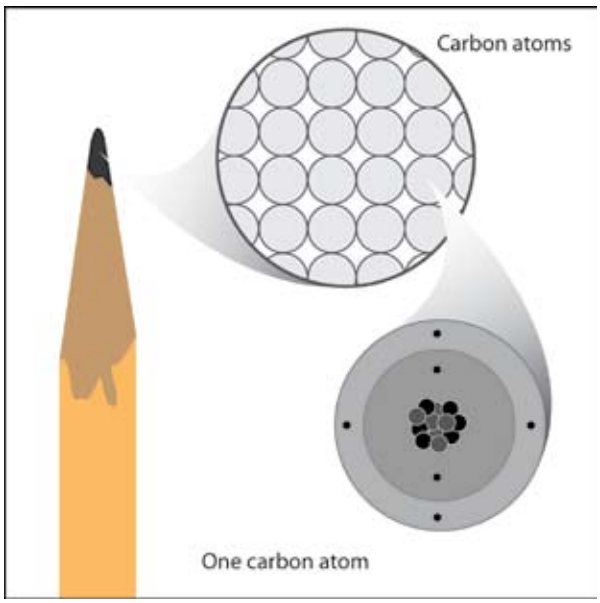

A proton has a positive charge. An electron has a negative charge. A neutron has no charge. The charge on the proton and electron are exactly the same size but opposite. The same number of protons and electrons exactly cancel each other in a neutral atom.

Two protons push each other away or *repel*. Two electrons also repel each other. But a proton and an electron move toward or *attract* each other. Another way of saying this is that the same or "like" charges repel one another and opposite charges attract one another. Since opposite charges attract each other, the negatively charged electrons in an atom are attracted to the positively charged protons. This attraction is what holds an atom together.

This is a simple model of a hydrogen atom which has one proton and one electron. The arrow shows that the electron is attracted to the proton.

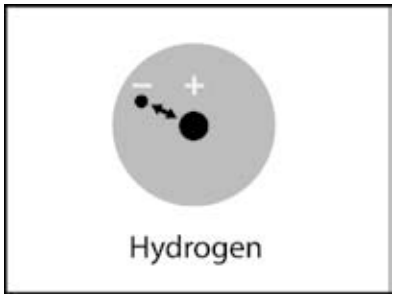

 ©2011 American Chemical Society

Another model of the hydrogen atom shows a cloudy-looking region in the space surrounding the nucleus. This model represents the electron as a cloud to show that it is not possible to know the exact location of an electron. The electron cloud shows the region surrounding the nucleus where the electron is most likely to be.

Proton, electrons, and static electricity

You can see evidence of electrons and protons attracting or repelling each other when you make static electricity. For example, when you rub a plastic strip between your fingers, electrons move from your skin to the plastic. If you assume that the plastic and the skin were both neutral before rubbing, the plastic now has more electrons or negative charges than positive.

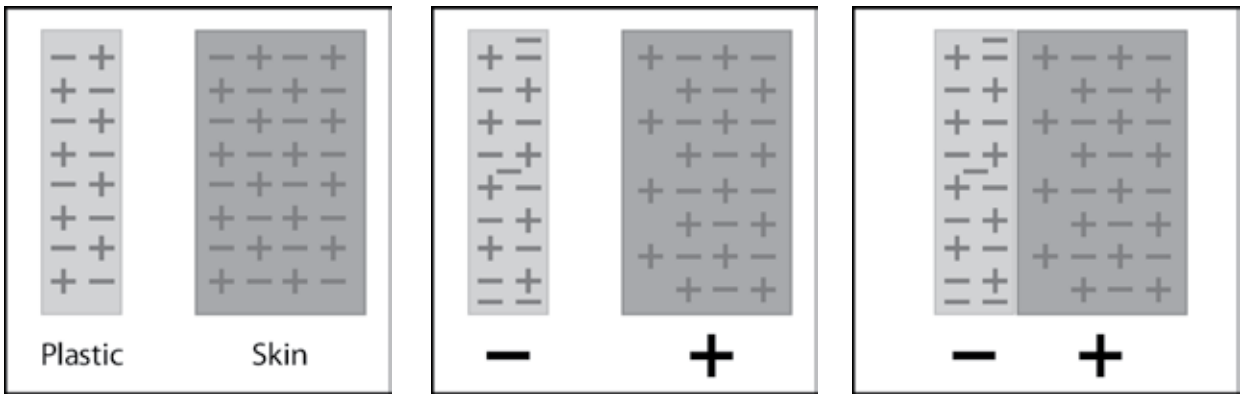

This gives the plastic an overall or *net* negative charge. Since your skin lost some negative charge, it now has more positive charge than negative, so your skin has an overall or net positive charge. When you bring the plastic near your fingers, the plastic is attracted because opposite charges attract.

If you rub *two* plastic strips on your fingers, each strip gains electrons so each one has a net negative charge. If you bring the strips near each other, they repel because like charges repel.

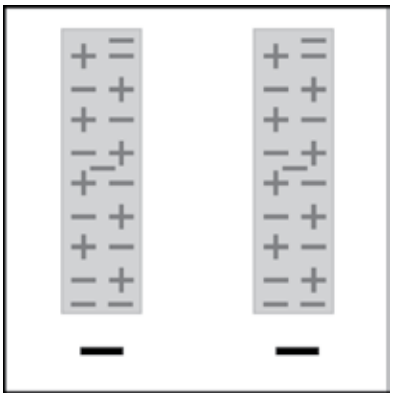

Rubbing a balloon and sticking it to a wall or using it to attract little pieces of paper is also evidence that protons and electrons have opposite charge. When you rub a balloon on your hair or clothes, electrons move onto the balloon. This gives the balloon a negative charge.

When the balloon is brought near a little piece of paper, electrons on the balloon repel electrons in the paper. The electrons in the paper move away from the balloon and leave an area of positive charge near the balloon. The positively charged area of the paper is attracted to the negative balloon and the paper moves to the balloon.

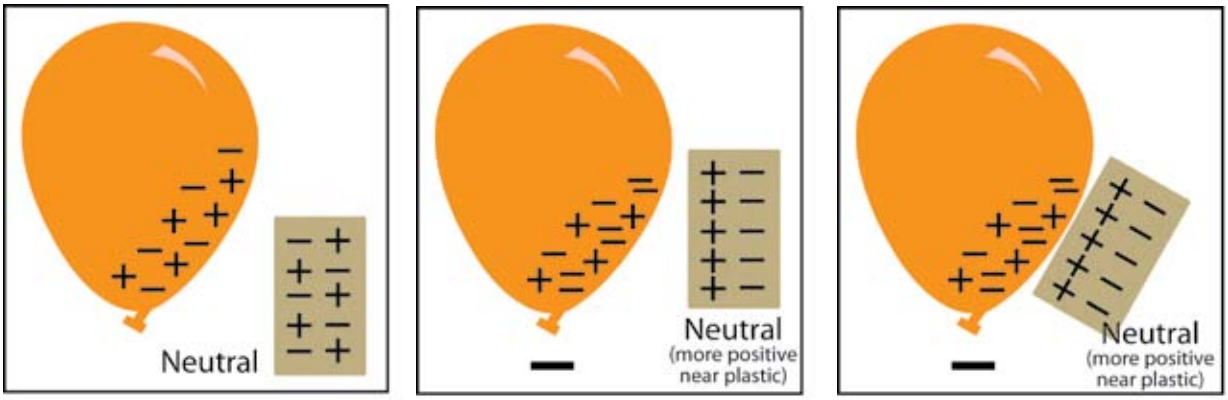

The Periodic Table of the Elements

You have read about protons and electrons, and about the atoms and molecules in different substances. The atoms that make up all solids, liquids, and gases are organized into a chart or table called the periodic table of the elements. The periodic table shows all the atoms that everything in the known universe is made from. Each box contains information about a different atom. It's like the alphabet in which only 26 letters, in different combinations, make up thousands of words. The 100 or so atoms of the periodic table, in different combinations, make up millions of different substances.

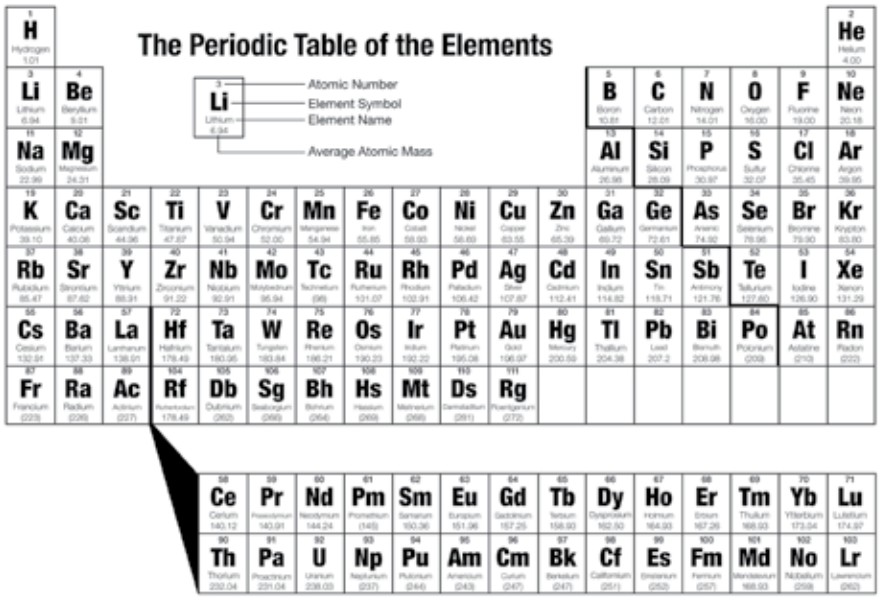

 ©2011 American Chemical Society

Each box in the periodic table contains basic information about an element.

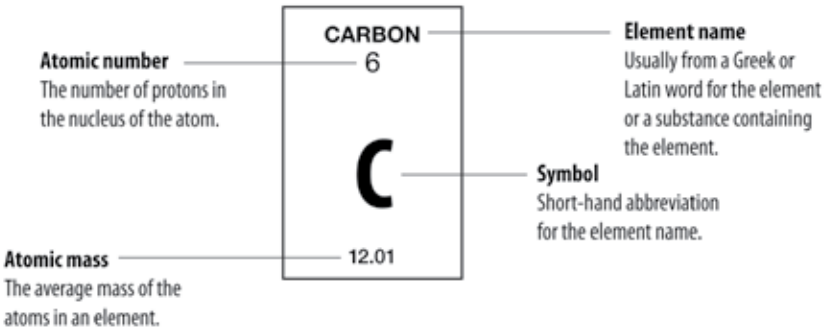

The meaning of the terms "atom" and "element" can be confusing because they are often used as if they are the same thing. They are related to one another but they are not the same. An atom is the smallest particle or "building block" of a substance. An element is a substance made up of all the same type of atom. For instance, a piece of pure carbon is made up of only carbon atoms. The piece of pure carbon is a sample of the element carbon. The people who developed the periodic table could have called it the Periodic Table of the Atoms but they did not have a firm understanding of atoms at that time. Since they were working with actual samples of elements such as copper, mercury, sulfur, etc., they called it the periodic table of the elements.

Atomic mass

The element name, atomic number, and symbol are pretty easy to understand. The atomic mass is a little trickier. The atomic mass of an element is based on the mass of the atoms that make up the element. The mass of the atoms is based on the protons, neutrons, and electrons of the atoms. The mass of the proton and neutron are about the same but the mass of the electron is much smaller (about 1/2000 the mass of the proton or neutron). The vast majority of the atomic mass is contributed by the protons and neutrons.

For any element in the periodic table, the number of electrons in an atom always equals the number of protons in the nucleus. But this is not true for neutrons. Atoms of the same element can have different numbers of neutrons than protons. Atoms of the same element with different numbers of neutrons are called isotopes of that element. The atomic mass given in the periodic table is an *average* of the atomic mass of the isotopes of an element.

For example, the vast majority of carbon atoms have 6 protons and 6 neutrons, but a small percentage of carbon atoms have 6 protons and 7 neutrons, and an even smaller percentage have 6 protons and 8 neutrons. Since the vast majority of carbon atoms have a mass very close to 12, and only a small percentage are greater than 12, the average atomic mass is slightly greater than 12 (12.01). For the atoms of the first 20 elements, the number of neutrons is either equal to or slightly greater than the number of protons.

Hydrogen is an exception to this rule. All hydrogen atoms have one proton but the vast majority have 0 neutrons. There is a small percentage of hydrogen atoms that have 1 neutron and a smaller percentage that have 2 neutrons. When you take the average mass of all the different isotopes of hydrogen, the mass is slightly greater than one (about 1.01).

Electrons are in energy levels surrounding the nucleus

Electrons surround the nucleus of an atom in three dimensions making atoms spherical. Electrons are in different regions around the nucleus like concentric spheres. These regions are called energy levels. Since it is very difficult to draw concentric spheres, the energy levels are usually shown in 2 dimensions.

This energy level model represents an oxygen atom. The nucleus is represented by a dot in the center which contains both protons and neutrons. The smaller dots surrounding the nucleus represent electrons in the energy levels. You can tell that this model is oxygen because there are a total of 8 electrons. Since neutral atoms in the periodic table have the same number of electrons as protons, this atom must have 8 protons. The number of protons is the same as the atomic number, so this atom's atomic number is 8, which is oxygen.

Arrangement of elements in the periodic table

There is a limit to the number of electrons that can go into the different energy levels of an atom. A certain number of electrons go into an energy level before they begin to go into the next level. After the first energy level contains 2 electrons (helium), the next electrons go into the second energy level. After the second energy level has 8 electrons (neon), the next electrons go into the third energy level.

After the third energy level has 8 electrons (argon), the next 2 electrons go into the fourth energy level. An energy level model is shown in the chart below for the first twenty elements in the periodic table.

The rows going across the periodic table are called *periods*. The columns going up and down are called *groups* or *families*.

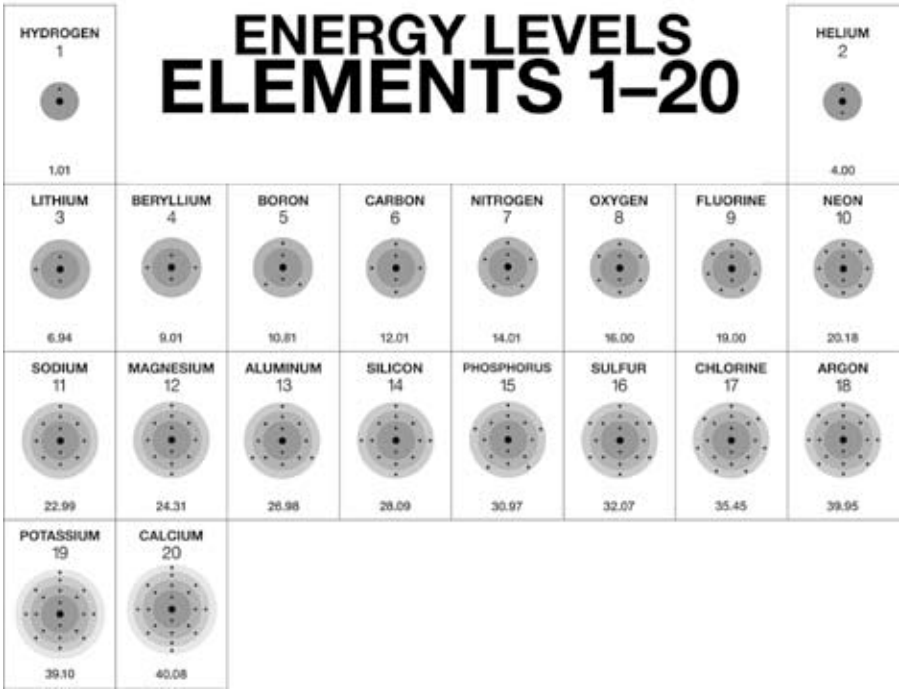

 ©2011 American Chemical Society

Number of energy levels in each period

- The atoms in the first period have electrons in 1 energy level.
- The atoms in the second period have electrons in 2 energy levels.
- The atoms in the third period have electrons in 3 energy levels.
- The atoms in the fourth period have electrons in 4 energy levels.

Atoms in a group have the same number of valence electrons

If you look at the atoms in a group, you will see that they each have the same number of electrons in their outermost energy level. Electrons in this level are called valence electrons. For instance, hydrogen, lithium, sodium, and potassium all have 1 valence electron. Valence electrons are important because they interact with other atoms and are responsible for many of the characteristic properties of the atom.

HOW ATOMS BOND TO EACH OTHER

Covalent bonding

Remember that a hydrogen atom has 1 proton and 1 electron and that the electron and the proton are attracted to each other. But if the atoms get close enough to each other, the electron from each hydrogen atom feels the attraction from the proton of the other hydrogen atom (shown by the double headed arrow).

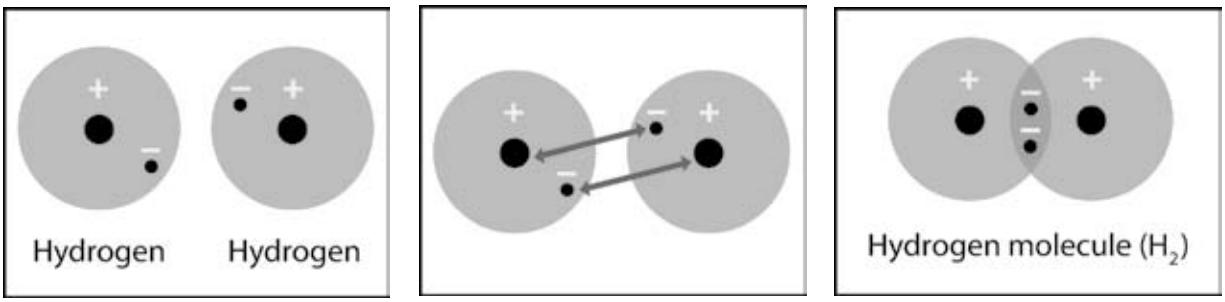

The attractions are not strong enough to pull the electron completely away from its own proton. But the attractions are strong enough to pull the two atoms close enough together so that the electrons feel the attraction from both protons. When the electrons are attracted to and shared by both atoms, the individual hydrogen atoms have bonded to become the *molecule* H_2. This type of bond is called a *covalent* bond. In a covalent bond, electrons from each atom are attracted or "shared" by *both* atoms. Two or more atoms covalently bonded are called a *molecule*.

There are two main requirements for atoms to form a covalent bond and make a molecule:

- There needs to be a strong enough attraction between the electrons in each atom for the protons in the other atom.
- There needs to be room in the outer energy level of both atoms.

Once bonded, the hydrogen molecule is more stable than the individual hydrogen atoms. By being part of a covalent bond, the electron from each hydrogen atom gets to be near two protons instead of only the one proton it started with. Since the electrons are closer to more protons, the molecule of two bonded hydrogen atoms is more stable than the two individual unbonded hydrogen atoms.

Atoms bond until their outer energy levels are full

The two electrons in the hydrogen molecule (H_2) can be thought of as "belonging" to each atom. This means that each hydrogen atom now has two electrons in its first energy level. The first energy level is the outer energy level for hydrogen and can only accommodate or "hold" two electrons. This means that the outer energy level is full. Atoms will covalently bond to one another until each atom's outer energy level is full.

Once the outer energy levels are full, additional atoms will not covalently bond to the atoms in the H_2 molecule. This will not happen for two main reasons:

- An electron from a new atom would have to join an atom in the H_2 molecule on the next energy level, further from the nucleus where it would not feel a strong enough attraction.
- An electron from a hydrogen atom already in the H_2 molecule and close to the nucleus would need to move further away to share with the new atom.

Both of these possibilities would make the molecule less stable and would not happen.

Covalent bonding also happens in a water molecule. When hydrogen atoms and an oxygen atom get close enough together, the electrons from the atoms feel the attraction from the other atom's protons.

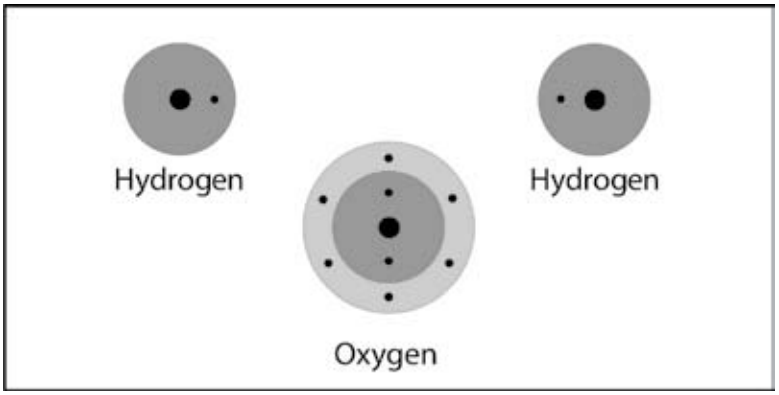

 ©2011 American Chemical Society

Because there is both a strong enough attraction between the atoms and room for electrons in their outer energy levels, they share electrons. This forms a covalent bond.

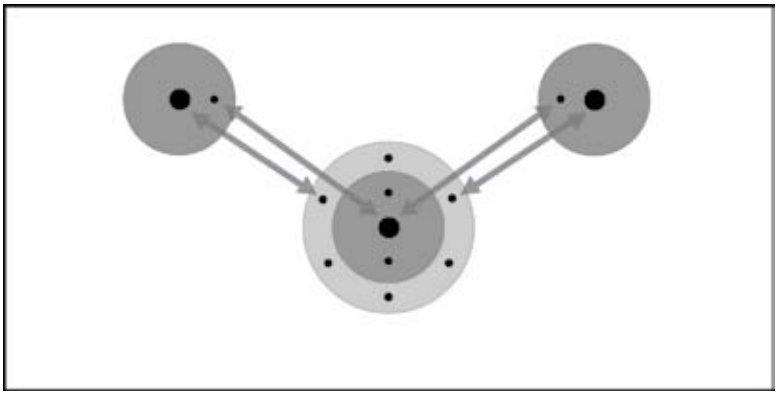

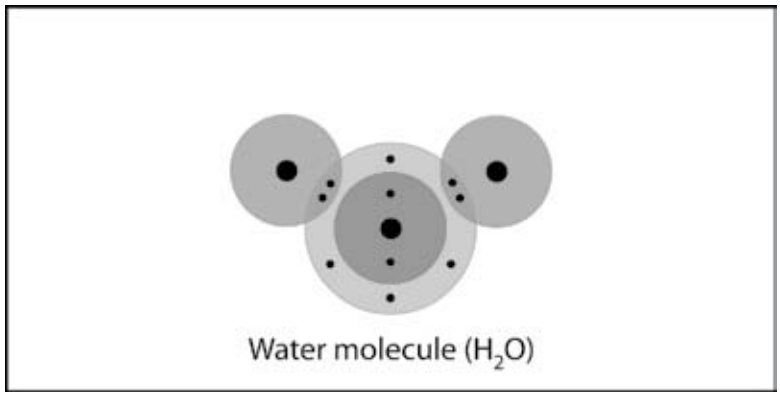

Two oxygen atoms form a double-bond

Oxygen molecules that are present in our air are made up of two oxygen atoms bonded together. Each oxygen atom has 6 valence electrons. When oxygen atoms get close together, the attractions from the nucleus of both atoms attract the outer electrons of the other atom. In this case, 2 electrons from each atom are shared. This is called a double bond.

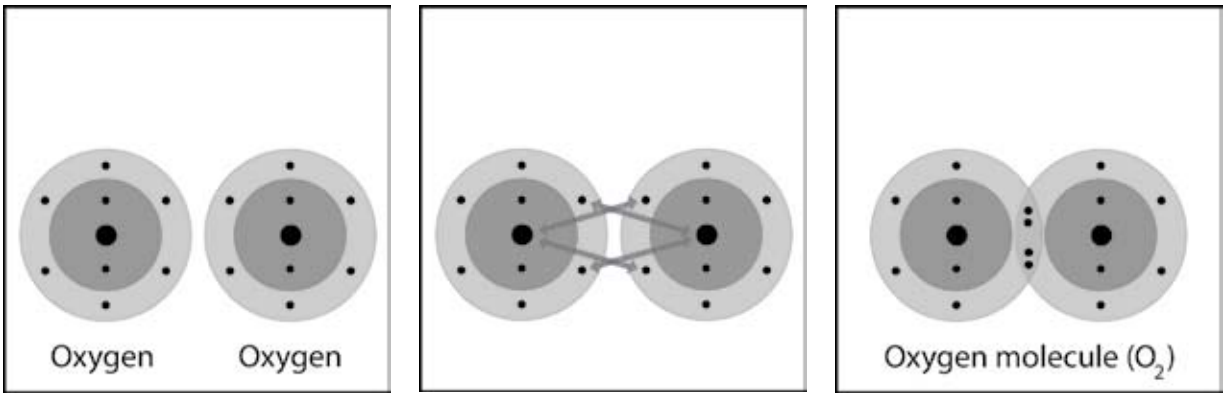

A carbon atom and two oxygen atoms bond to make carbon dioxide (CO_2)

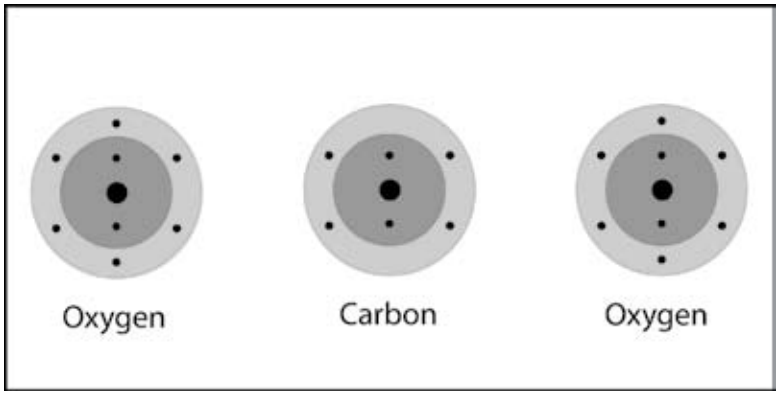

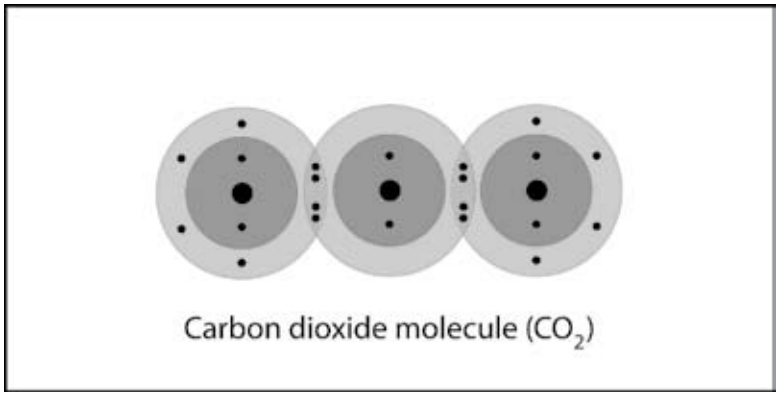

Ionic bonding

There is another type of bond called an *ionic bond*. One of the most common substances formed by ionic bonding is salt or sodium chloride (NaCl). Look at the model of sodium chloride. The spheres with the "+" and "–" signs on them are called *ions*.

The larger green ones are chloride ions and the smaller gray ones are sodium ions. These ions are formed from chlorine and sodium atoms.

When a sodium and chlorine atom get close enough together, the electrons from the atoms feel the attraction of the protons in the nucleus of the *other* atom.

Chlorine has a stronger attraction for electrons than sodium (shown by the thicker arrow).

 ©2011 American Chemical Society

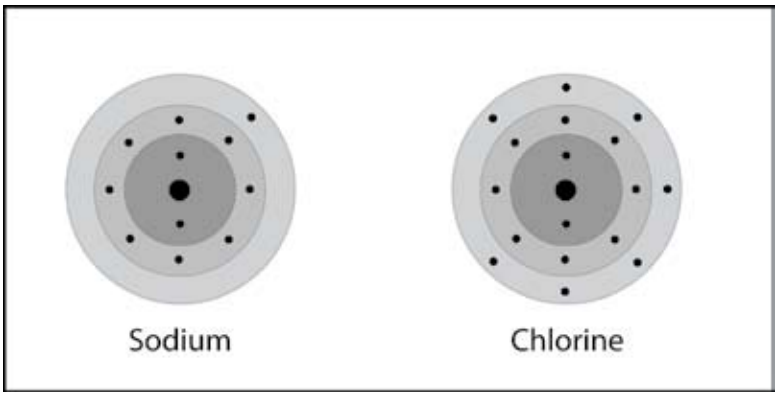

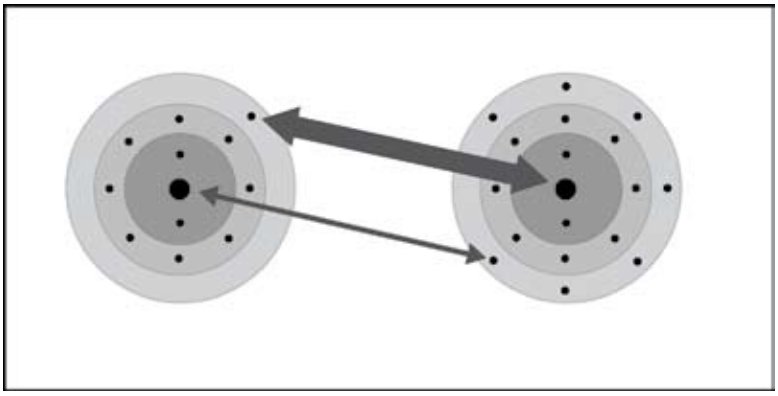

During the interactions between the atoms, the electron in sodium's outer energy level is transferred to the outer energy level of the chlorine atom.

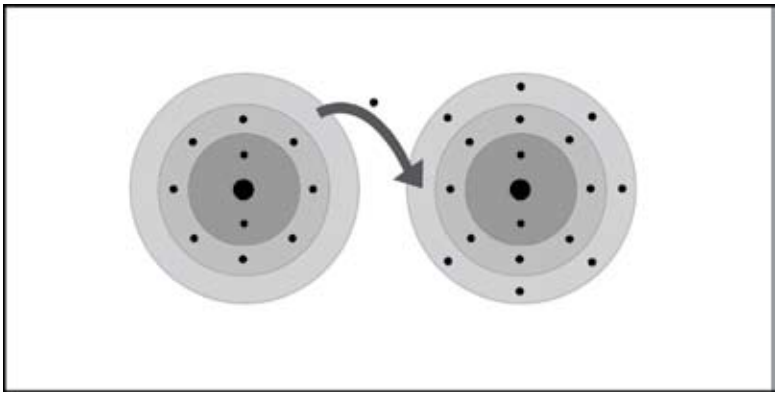

Chlorine *gains* an electron so that the chloride ion has 18 electrons and 17 protons. Since the chloride ion has one more electron than proton, chloride is a *negative* ion with a charge of -1. Sodium loses an electron leaving it with only 10 electrons but 11 protons. This makes sodium a *positive* ion with a charge of +1.

Oppositely charged ions attract each other forming an ionic bond. The bonded ions are more stable than the individual atoms were.

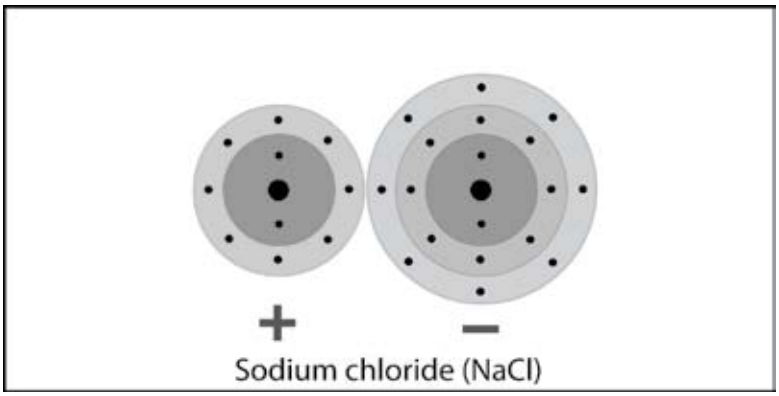

When ions form, atoms gain or lose electrons until their outer energy level is full.

For example, when sodium loses its one outer electron from the third energy level, the second level becomes the new outer energy level and is full. Since these electrons are closer to the nucleus, they are more tightly held and will not leave.

When chlorine gains an electron its third energy level becomes full. An additional electron cannot join because it would need to come in at the fourth energy level. This far from the nucleus, the electron would not feel enough attraction from the protons to be stable.

Ionic bonding in calcium chloride ($CaCl_2$)

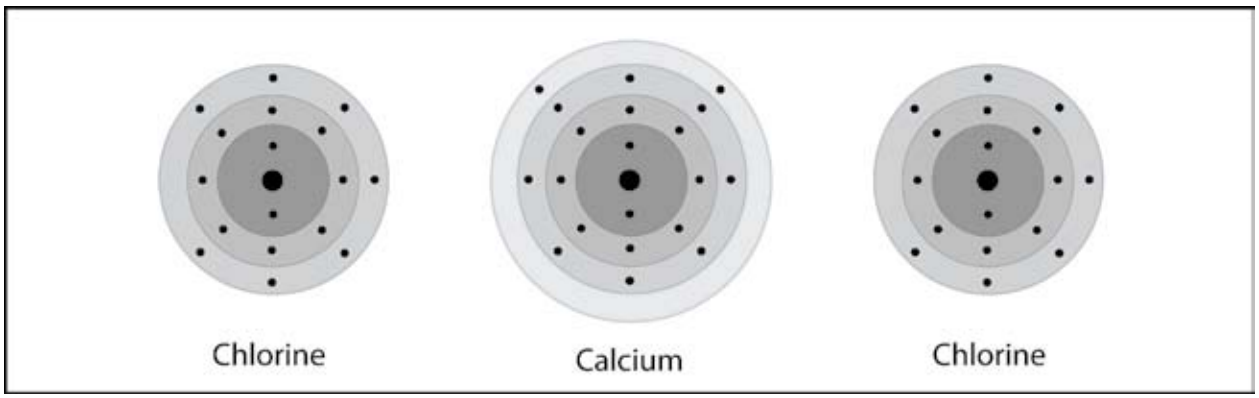

The protons of the calcium atom attract the electrons from the chlorine atom. The protons of the two chlorine atoms attract the electrons from the calcium atom more strongly as shown by the thicker arrows.

 ©2011 American Chemical Society

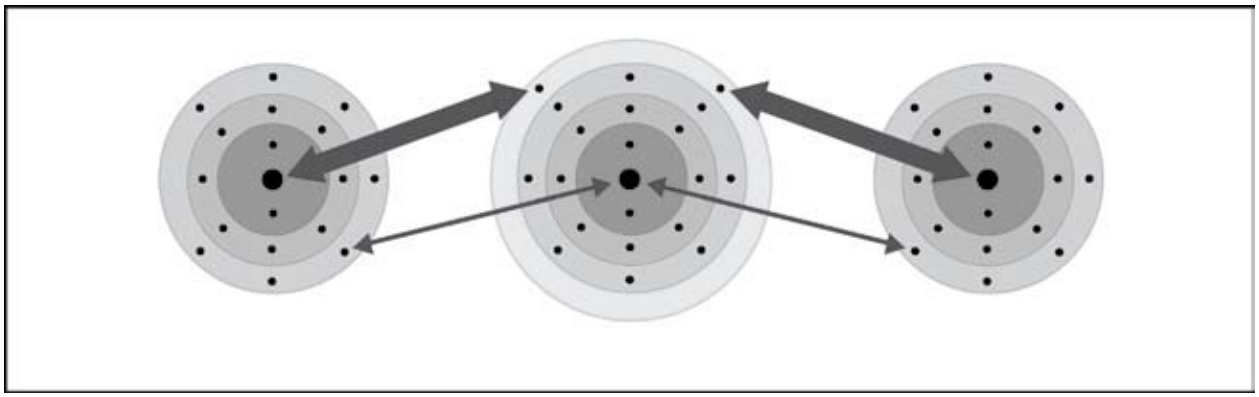

During the interactions between the atoms, the two electrons in calcium's outer energy level are transferred to the outer energy level of each of the chlorine atoms.

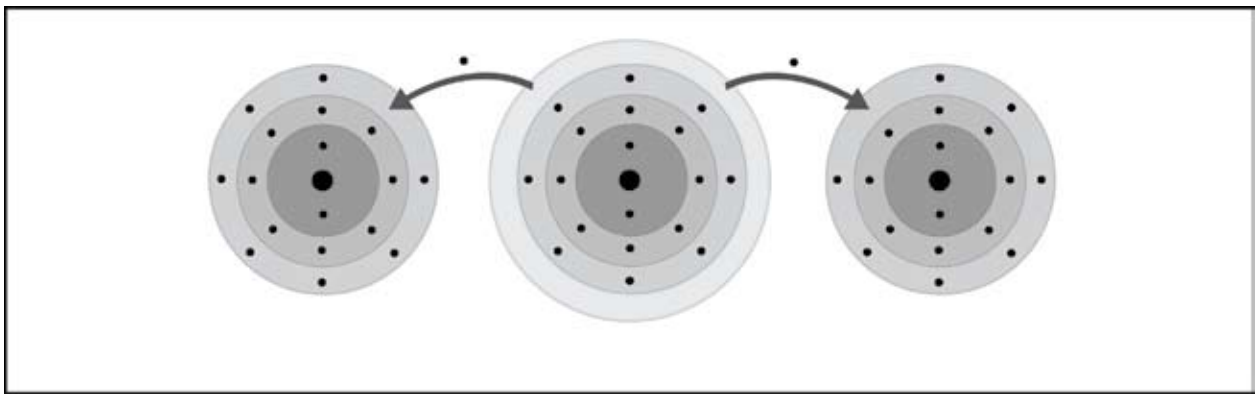

Each chlorine atom *gains* an electron so that the chloride ion has 18 electrons and 17 protons. This makes each chloride a *negative* ion with a charge of –1. Calcium *loses* two electrons leaving it with only 18 electrons and 20 protons. This is makes calcium a *positive* ion with a charge of +2.

Oppositely charged ions attract each other forming an ionic bond. The bonded ions are more stable than the individual atoms were.

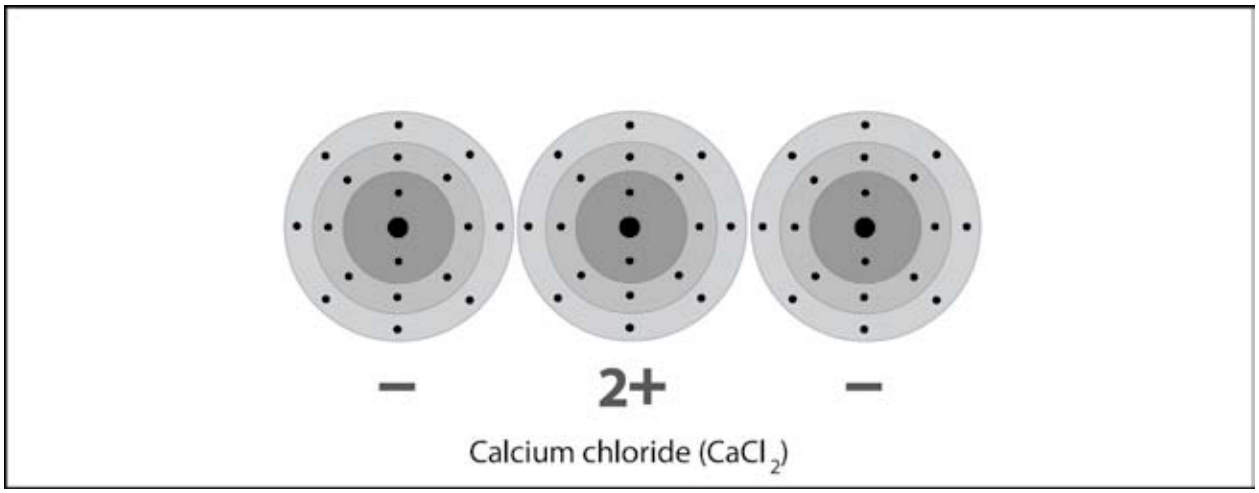

Calcium chloride ($CaCl_2$)